EDP2 - 1

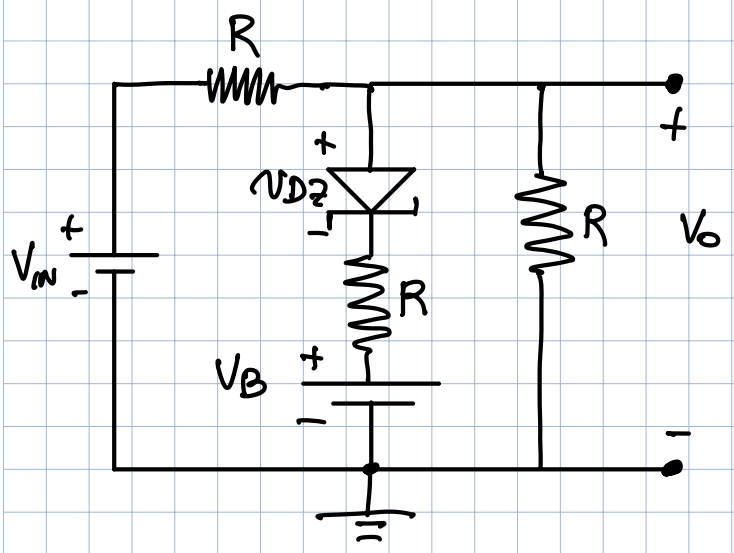

$R = 10\ k\Omega$ $\quad V_{ON} = 0V$

$V_B = 8V$ $\quad V_Z = 5V$

TROVARE LA TRANSCARATTERISTICA

$V_o = f(V_{IN})$

HP $D_Z = OFF$

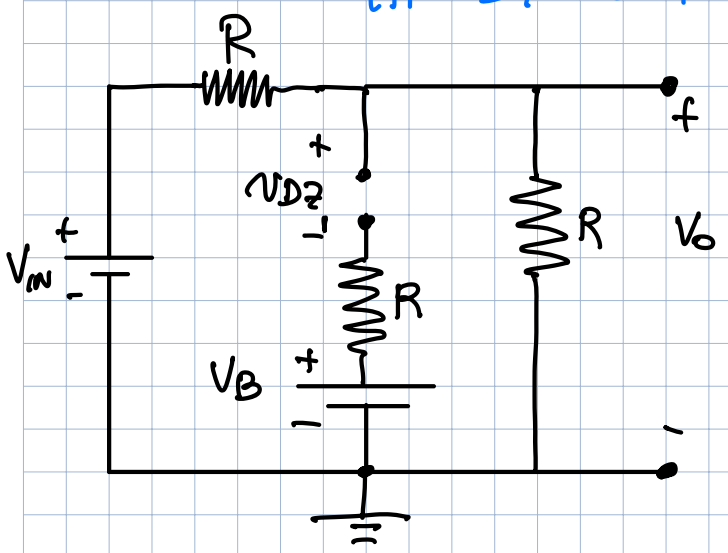

$$V_o = V_{IN}\frac{R}{R+R} = \frac{V_{IN}}{2} = V_{DZ+}$$

$$v_{DZ} = V_o - V_B = \frac{V_{IN}}{2} - V_B$$

AFFINCHÈ $D_Z = OFF$

$$-V_Z \le v_{DZ} \le V_{ON}$$

$v_{DZ} \geq -V_Z \Rightarrow \frac{V_{IN}}{2} - V_B \geq -V_Z$

LIMITE x BREAKDOWN

$$V_{IN} \geq 2(V_B - V_Z) = 6V$$

$v_{DZ} \le V_{ON} \Rightarrow \frac{V_{IN}}{2} - V_B < 0 \qquad V_{IN} < 2V_B$

LIMITE x "ON"

$$V_{IN} < 16V$$

$$\Rightarrow \boxed{\begin{array}{l} 6 \le V_{IN} \le 16V \\ D_Z = OFF \quad e \\ V_o = \frac{V_{IN}}{2} \end{array}}$$

RACCORDI

$V_o(16) = 8V$

$V_o(6) = 3V$

DALLA RELAZIONE LIMITE x "ON":

$V_{DZ} \geq V_{ON} \Rightarrow DZ = ON$

$\Rightarrow V_{IN} > 16\,V \Rightarrow DZ = ON$

$DZ = ON$

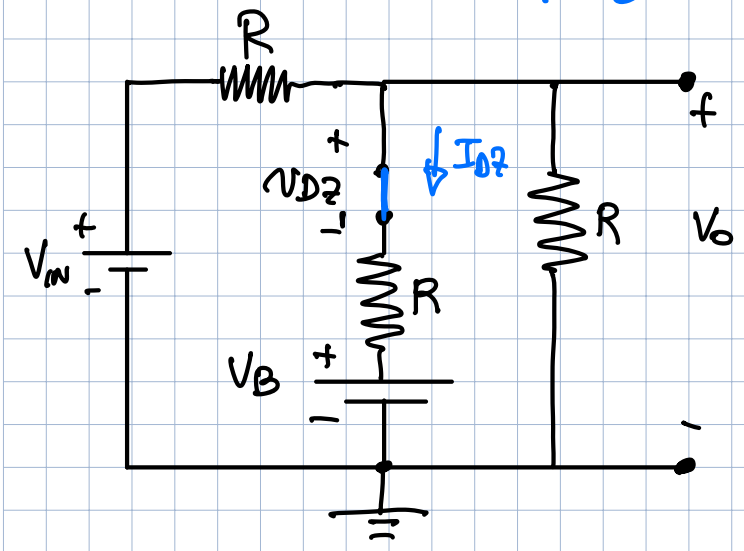

SOVRAPP. EFFETTI:

$$V_o = V_{IN} \cdot \frac{R//R}{R + R//R} + V_B \cdot \frac{R//R}{R + R//R}$$

$R//R = \frac{R}{2}$

$$\frac{R//R}{R + R//R} = \frac{R/2}{R + R/2} = \frac{1}{3}$$

$$\Rightarrow V_o = \frac{V_{IN}}{3} + \frac{V_B}{3}$$

$$I_{DZ} = \frac{V_o - V_B}{R} \geq 0 \qquad V_o - V_B > 0 \qquad \frac{V_{IN}}{3} + \frac{V_B}{3} > V_B$$

$V_{IN} > 2V_B = 16\,V$ OK

$DZ = ON$

RACCORDO

$$V_o(16\,V) = \frac{16\,V}{3} + \frac{8\,V}{3} = \frac{24}{3} = 8\,V$$

OK RACCORDO

$$\boxed{\begin{array}{l} V_{IN} \geq 16\,V \\ DZ = ON \\ V_o = \frac{V_{IN}}{3} + \frac{V_B}{3} \end{array}}$$

DALLA RELAZIONE LIMITE x BREAKDOWN

DZ IN BREAK se $\underline{v_{DZ} < -V_Z}$

$V_{IN} < 6V \Rightarrow$ DZ BREAKDOWN

DZ = BREAK

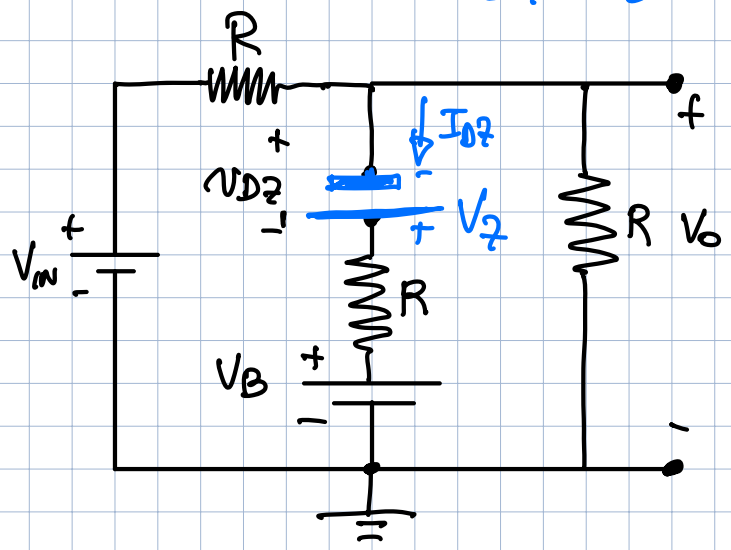

TRA i VARI POSSIBILI MODI DI RISOLVERE USO SOVRAPP. (UNENDO V_{DZ} e V_B)

$$V_o = V_{IN} \cdot \frac{R//R}{R+R//R} + (V_B - V_Z) \cdot \frac{R//R}{R+R//R} = \frac{V_{IN}}{3} + \frac{3V}{3} = \frac{V_{IN}}{3} + 1V$$

$I_{DZ} < 0$

$$I_{DZ} = I_R = \frac{V_o + V_Z - V_B}{R} < 0$$

$$\Rightarrow \frac{V_{IN}}{3} + 1V + 5V - 8V < 0$$

$$\frac{V_{IN}}{3} < 2V \Rightarrow V_{IN} < 6V \quad \text{OK}$$

RACCORDO $V_o(6) = \frac{6V}{3} + 1V = 3V$ OK RACCORDO

$$\boxed{\begin{array}{l} V_{IN} < 6V \\ DZ = \text{BREAK.} \\ V_o = \frac{V_{IN}}{3} + 1V \end{array}}$$

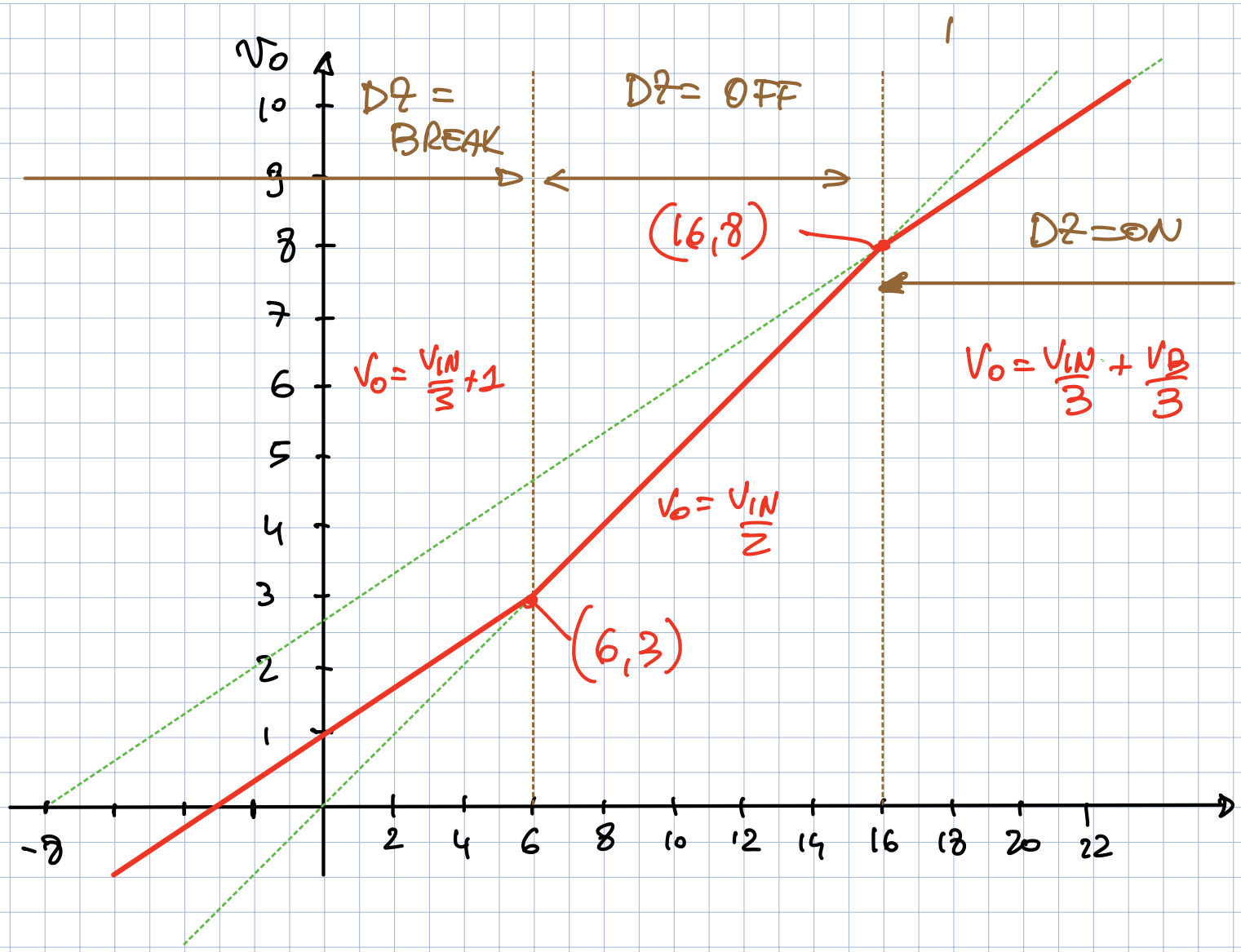
V_O
DZ = BREAK
DZ = OFF
DZ = ON
(16,8)
(6,3)
$V_O = \frac{V_{IN}}{3} + 1$
$V_O = \frac{V_{IN}}{2}$
$V_O = \frac{V_{IN}}{3} + \frac{V_B}{3}$
10
9
8
7
6
5
4
3
2
1
-8
2
4
6
8
10
12
14
16
18
20
22